FIXED SLIM TRAVELLER

1

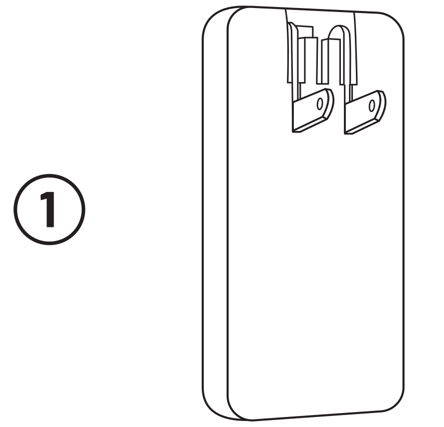

2

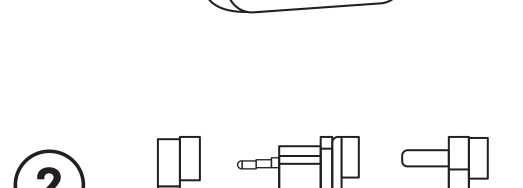

AU EU UK

3

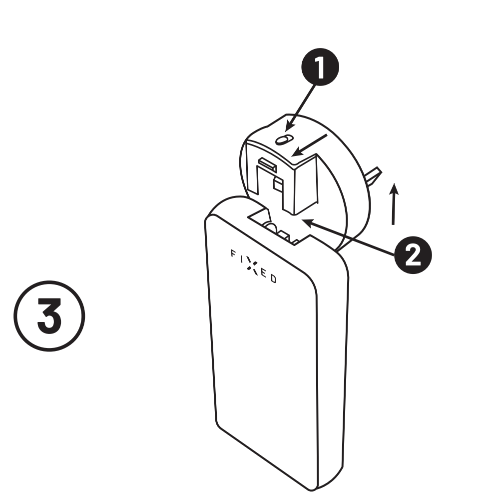

EN

USER MANUAL

INSTRUCTIONS FOR FIXED CHARGERS

Read this manual and especially the safety warnings before using the product.
Keep the manual for future reference and include it when handing over the product to a third party.
FIXED.zone a.s. is not responsible for injury or damage to health or property resulting from improper use of the product.

SAFETY NOTICE - CHARGER

Only plug the product indoors into properly installed 100-240 VAC outlets. Plug the product only into easily accessible outlets from which you can quickly unplug it if a problem occurs. Do not use the product if it is damaged. Never touch the product with wet or damp hands. Do not use the product in a wet room or in the rain. Never insert metal objects such as keys or paper clips into the product's holes. To prevent malfunctions or damage to the product, avoid dropping the product, squeezing the product, wiggling the product, or applying excessive pressure to the product. Protect the product from moisture, water and other liquids. If the product comes into contact with water, moisture or other liquids, do not use it to avoid electric shock. Do not expose your product to a heat source, direct sunlight, or place it on a heater, stove or other heat sources such as the dashboard of a car in summer. Never use the product unattended. The surface may become hot during operation. Do not cover the product with anything during use. Never use the product when moving from cold to heat. Condensation may form and damage the product. Wait for the product to reach room temperature. This may take several hours. Application temperature: 0-40 °C. Do not attempt to modify, repair or disassemble the product in any way. If the product is damaged, do not use it. Never use aggressive cleaning agents, alcohol or other chemical cleaning solutions as they may damage the surface or functionality of the product. Disconnect all connected cables before cleaning. Do not immerse the product in water or other liquids. There are no user-repairable parts inside the product. Never disassemble the product. Keep the product out of the reach of children. Never allow children or persons with disabilities to use electrical equipment unsupervised. Make sure children do not play with the plastic packaging, they may swallow small parts and suffocate.

USAGE – CHARGER

Before charging your device, make sure that its technical characteristics (voltage, current) are compatible with the charger.

USE IN A US OUTLET:

1. Slide the integrated pins out of the charger body
2. With the pins removed, plug the charger directly into a US outlet.

①

USE IN AU, EU AND UK SOCKETS:

1. To use these sockets, first push the US pins back into the charger body.
2. Choose the appropriate adapter for the socket you want to use the charger in.
3. Adaptér pevne zasuňte do nabíjačky, kým sa červená uvoľňovacia páčka úplne nezaistí. Uistite sa, že je páčka úplne zaistená, pretože slúži ako bezpečnostné zariadenie, ktoré zabraňuje náhodnému odpojeniu a udržiava správny kontakt medzi adaptérom a nabíjačkou.

②

REPLACING THE ADAPTER:

1. To replace the adapter, locate the red release lever on the fitted adapter.
2. Pull the red release lever to the side to release the adapter.
3. Then insert the desired adapter into the charger.

③

4. Connect the USB cable to your device.
5. Connect the USB cable of your device to the USB port of the charger.
6. Plug the charger into a power outlet (100-240V AC). Your device will start charging.
7. After use, unplug the charger from the outlet and the USB cable from your device.

PART OF THE PACKAGE:

1x Travel charger
1x AU Travel Adapter
1x EU Travel Adapter
1x UK Travel Adapter
1x Charging cable
1x User manual

CLEANING - CHARGER

Disconnect all cables before cleaning. / If necessary, clean the charger with a damp cloth and allow it to dry completely before use. / Use a clean brush with soft, long bristles to remove dust from the connectors. /Do not use any solvents, corrosive or gaseous cleaning agents. / Make sure that no water or other liquids have entered the unit.

TECHNICAL SPECIFICATIONS - CHARGER

Input: 100-240V AC
Temperature of use: 0-40 °C

STORAGE

Keep the product in a clean and dry environment. Do not leave it in direct sunlight.

PRODUCT DISPOSAL

(Applicable in countries with separate collection systems for recyclable materials).
Old products must not be disposed of with household waste! If the product no longer works, dispose of it in accordance with the applicable regulations in your country.
This ensures that old products are recycled in a professional manner and eliminates negative environmental consequences. For this reason, the electrical equipment is marked with the symbol shown here.

This product is CE marked in accordance with EMC Directive 2014/30/EU, LVD 2014/35/EU and RoHS 2011/65/EU. FIXED.zone a.s. hereby declares that this product complies with the essential requirements and other relevant provisions of the EMC 2014/30/EU, LVD 2014/35/EU and RoHS 2011/65/EU Directives.

FIXED.zone a.s.,
Budějovická 19,
Homole, 37001
Czech Republic