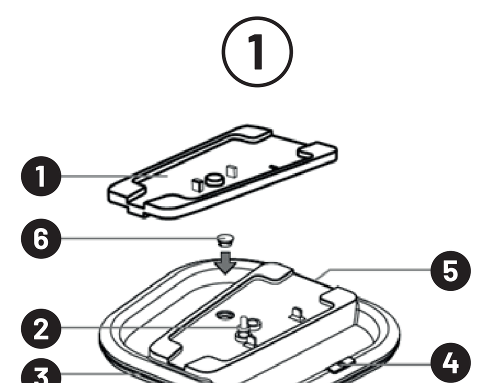

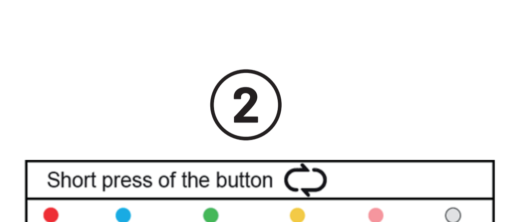

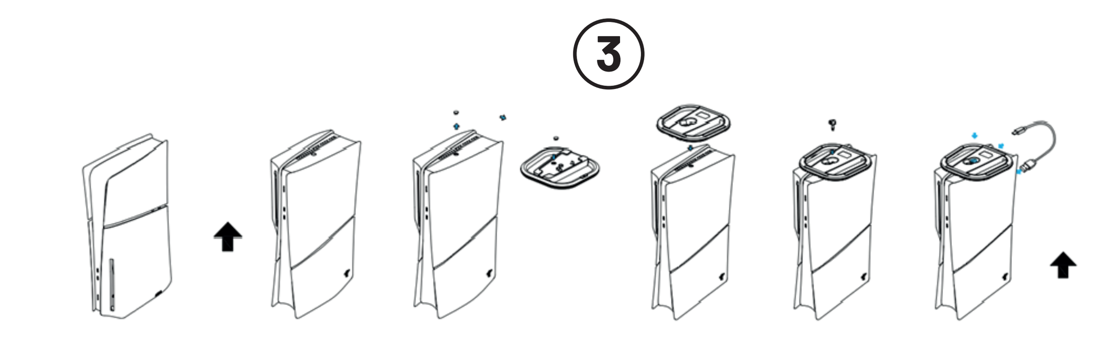

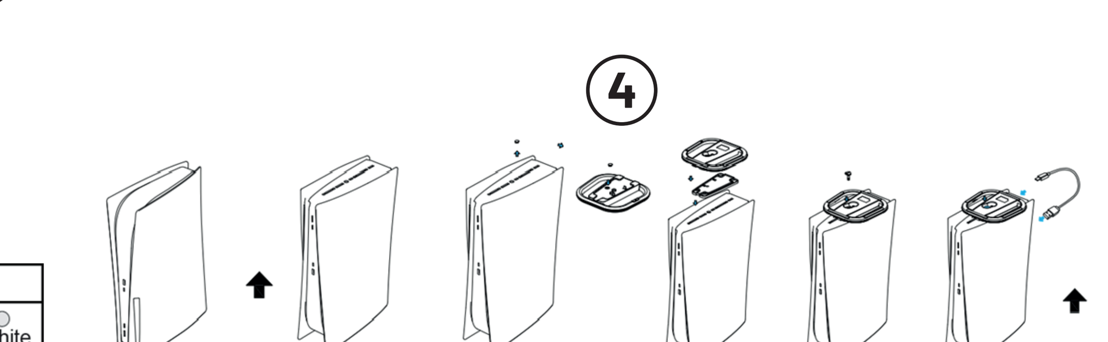

EN

USER MANUAL

Thank you for purchasing the FIXED stand with backlight for PS5 Disk and Digital Edition and PS5 (Slim) 2023 Disk and Digital Edition consoles.

①

1. Extension for older PS5 (original version)
2. Screw for mounting on the console
3. RGB LED lighting
4. Control for LED lighting
5. USB-C power input
6. Hole for placing the thread plug of the console

Read this manual before use.
Compatibility: PS5 Digital/Disk Edition, PS5 (Slim, 2023) Digital/Disk Edition

BUTTON FUNCTION:

②

1. The button on the side of the stand is used to change the backlight colours.
2. Hold the button for 3 seconds to turn off the backlight.
3. To turn the backlight back on, hold the button again for 3 seconds.

INSTALLATION INSTRUCTIONS:

MANUAL FOR PS5 (SLIM) DIGITAL/DISC EDITION

③

1. Place your PS5 (Slim) console on a flat surface
2. Turn the console upside down
3. Remove the cover plate from your console and place it on the pre-prepared hole on the stand
4. Place the stand on your console
5. Screw the stand to your console through the hole that shows the thread in the console
6. Connect the USB-A to USB-C cable found in the package. Plug the USB-A connector into the console and the USB-C connector into the stand.
7. Return the console to the original position

MANUAL FOR PS5 DIGITAL/PS5 DISC (OLDER VERSIONS)

④

1. Place your PS5 console on a flat surface
2. Turn the console upside down
3. Remove the cover plate from your console and place it on the pre-prepared hole on the stand
4. Place the attachment for the older version of the console first and then attach the stand itself
5. Screw the stand to your console through the hole that shows the thread in the console
6. Connect the USB-A to USB-C cable found in the package. Plug the USB-A connector into the console and the USB-C connector into the stand
7. Return the console to the original position

PRODUCT SPECIFICATIONS:

USB-C input: DC 5V/0.035A
Button: light control
Dimensions: 150x144x20 mm
Weight: 191 g
Material: ABS

PART OF THE PACKAGE:

1x FIXED stand with LED backlight
1x Extension for older PS5 (original version)
1x Screw for mounting on the console
1x User manual
1x USB-A to USB-C charging cable 200 mm

NOTES:

The product is warranted according to the legal regulations in force in the countries where it is sold. In case of service problems, please contact the dealer from whom you purchased the equipment.
FIXED assumes no responsibility for damages caused by improper use of the product.

PRODUCT CARE AND MAINTENANCE

Use a soft cloth to clean the stand body.

SECURITY MEASURES

Do not expose the device to rain or snow or immerse it in water.
Do not leave the stand in the car in the sun.
Do not expose the device directly to sunlight or leave it near heat sources.
Do not use the stand if it has been severely impacted, dropped, or damaged in any way.
Do not disassemble the device; there is a risk of electric shock and/or burns. Do not modify the power cord.
Keep the standout of the reach of children. Unauthorized opening or modification of product parts will void the warranty.
Storage temperature of the product: 0 to 35 °C
Product operating temperature: 0 to 40 °C

PRODUCT DISPOSAL

(Applicable in countries with separate collection systems for recyclable materials).
Old products must not be disposed of with household waste! If the product no longer works, dispose of it in accordance with the applicable regulations in your country. This ensures that old products are recycled in a professional manner and also eliminates negative consequences for the environment. For this reason, the electrical equipment is marked with the symbol shown here.

This product is CE marked in accordance with EMC Directive 2014/30/EU and RoHS Directive 2011/65/EU. FIXED.zone a.s. hereby declares that this product complies with the essential requirements and other relevant provisions of the EMC 2014/30/EU and RoHS 2011/65/EU Directives.

FIXED.zone a.s.
Kubatova 6
České Budějovice 37004
Czech Republic